RevNo	Revision note	Date	Signature	Checked

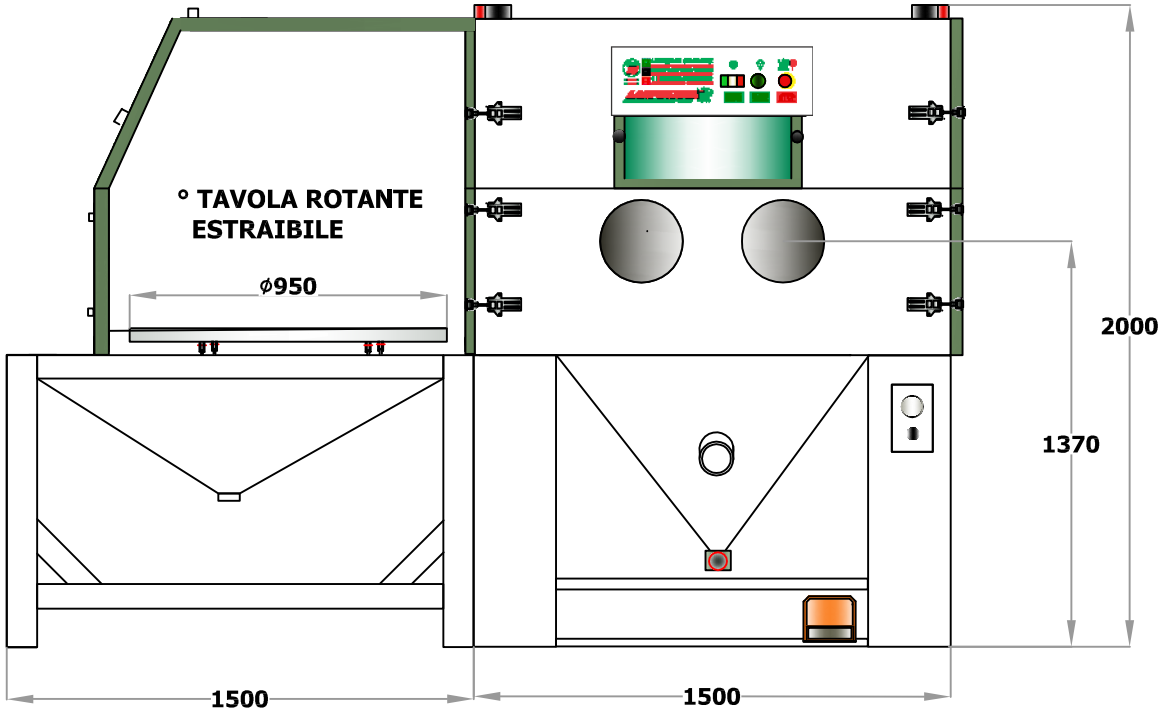

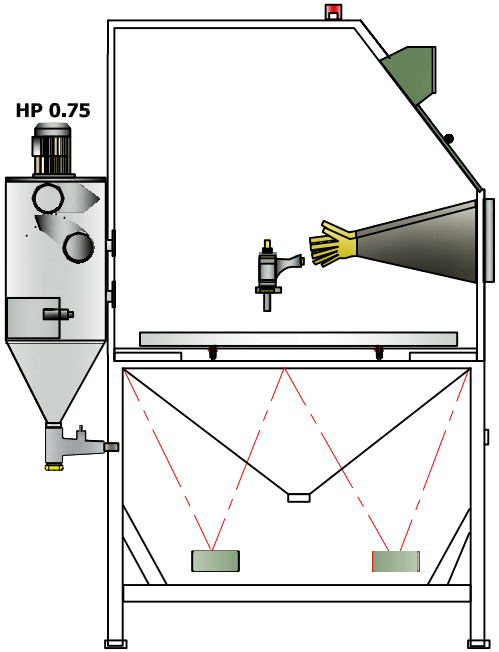

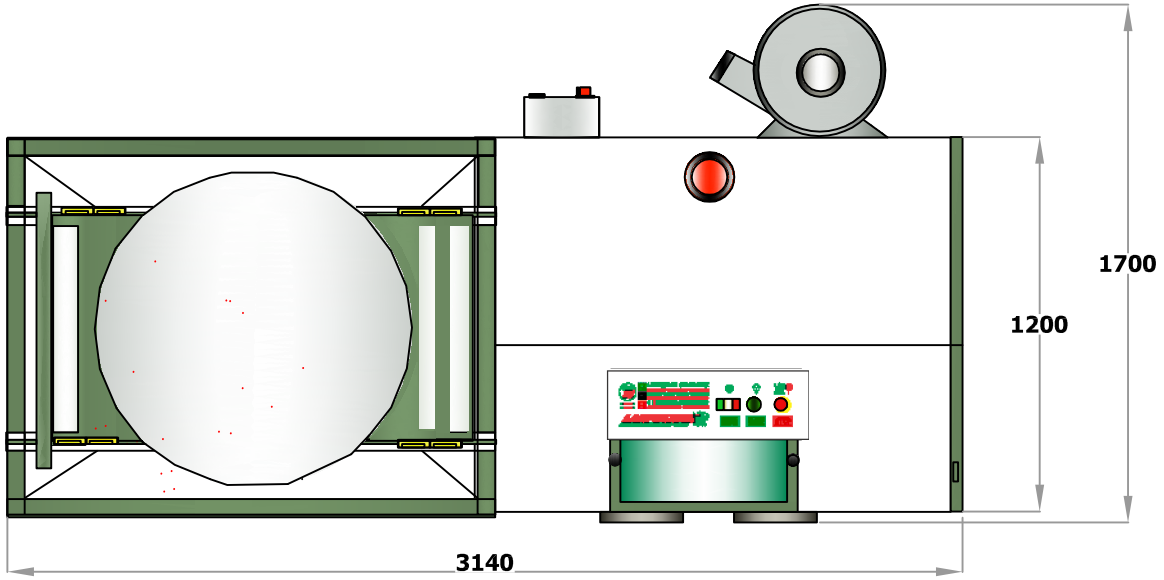

MADE
IN
ITALY

3 ANNI DI GARANZIA

LAMPUGNANI
SANDBLASTING HI-TECH

Itemref	Quantity	Title/Name, designation, material, dimension etc			Article No./Reference
Designed by Lampugnani		Checked by XXX	Approved by - date	Filename XXX	Date 19/02/2015	Scale 1:1

LC-3-TE

Lampugnani sabbiatrici srl.

MISURE ESPRESSE IN mm. | Edition 0 | Sheet 1/1